REVISIONS						
ZONE	LTR	DESCRIPTION	CHANGE No	DATE	BY	APPR'D
	AA	INITIAL RELEASE	DR56150	12APR17	SLK	BLM
7-D	AB	AB1 CHANGED TUBE ROUTING AND ADDED CHAFE GUARD	C'4678	12OCT17	SLK	BLM

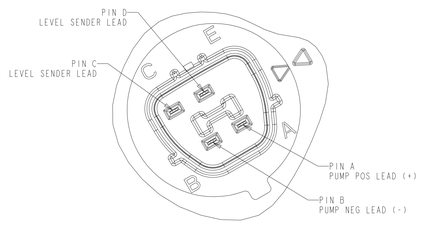

DETAIL X
SCALE 2:1

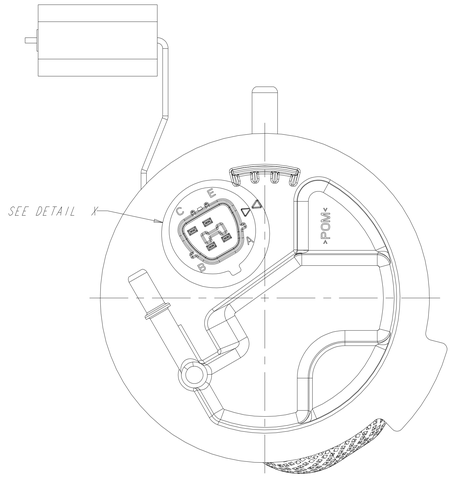

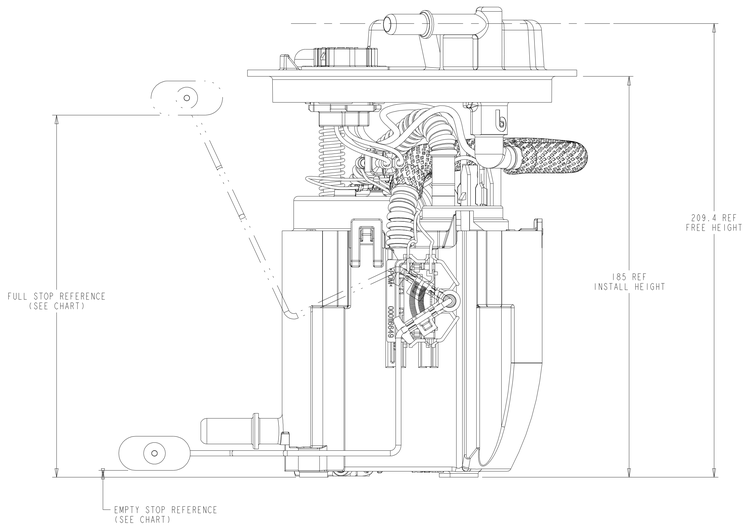

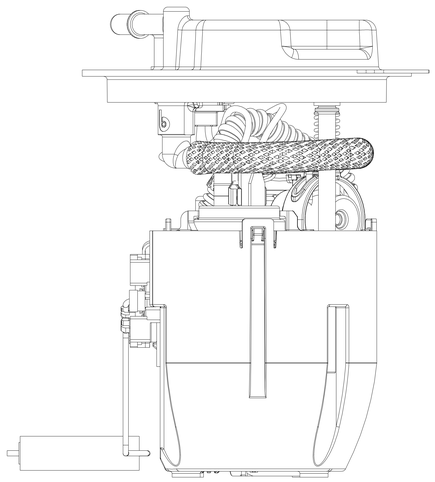

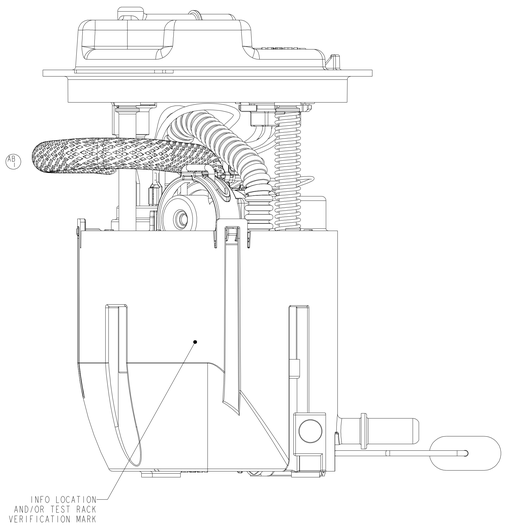

LEVEL SENDER UNIT HEIGHT VS RESISTANCE		
FLOAT POSITION	HEIGHT (mm)	RESISTANCE (Ohms)
FULL STOP	167.0 REF	10 ± 2
EMPTY STOP	3.0 REF	180 ± 4

NOTES:

1. SPECIAL CUSTOMER PACKAGING REQUIREMENTS MAY CALL FOR THE ADDITION OF SPECIFIC LABELS NOT SHOWN ON THIS DRAWING.

2. MODULE TO BE PACKAGED USING COMPONENTS NOTED ON BOM SO THAT CONTAMINATION FROM FOREIGN MATERIAL IS PREVENTED:
   - PLUG PROTECTORS ON PORTS
   - POLY BAG

3. SHOWN WIRE ROUTING MAY DIFFER FROM FINISHED PRODUCT.

KEY PRODUCT CHARACTERISTICS		
REFER TO TI AUTOMOTIVE GLOBAL ADVANCED QUALITY PLANNING DOCUMENT # FTDS-PI-P-021 FOR THE CLASSIFICATION AND CONTROL OF KEY PRODUCT CHARACTERISTICS	TOTAL ON SHEET	TOTAL ON DRAWING
▽ - SAFETY CHARACTERISTIC	- - -	- - -
◇ - CRITICAL CHARACTERISTIC	- - -	- - -
⟨KC⟩ - HIGH IMPACT CHARACTERISTIC	- - -	- - -

TI AUTOMOTIVE CONFIDENTIAL AND PROPRIETARY:
THIS DRAWING IS PROPERTY OF TI AUTOMOTIVE. TI AUTOMOTIVE CLAIMS PROPRIETARY RIGHTS IN THE SUBJECT MATTER SHOWN AND DESCRIBED HEREIN. THIS DRAWING IS PROVIDED TO RECIPIENT UPON THE UNDERSTANDING THE DRAWING IS PROVIDED FOR REFERENCE PURPOSES ONLY AND ON THE EXPRESS CONDITION THAT IT WILL BE HELD IN CONFIDENCE. THIS DRAWING MAY NOT BE USED FOR ANY PURPOSE OTHER THAN TO QUOTE, OR MANUFACTURE BY OR PROCUREMENT FROM OTHERS OF THE ARTICLE OR PART SHOWN WITHOUT TI AUTOMOTIVE'S EXPRESS WRITTEN CONSENT. NO LICENSE OR OTHER RIGHTS TO USE THE SUBJECT MATTER SHOWN IS GRANTED TO RECIPIENT. COPYRIGHT TI AUTOMOTIVE 2016, ALL RIGHTS RESERVED.

METRIC
ALL DIMENSIONS ARE IN MILLIMETERS

DO NOT SCALE
DECIMAL TOLERANCES UNLESS OTHERWISE SPECIFIED
ONE PLACE ±0.25 TWO PLACE ±0.13 ANGLES ±1°

THIRD ANGLE PROJECTION

DIMENSIONS IN ACCORDANCE WITH ASME Y14.5 - 2009

TI Automotive
630 COLUMBIA ST.
CARO, MI 48723
+1 989.673.7727

ENGINEER:	B.MIDDLETON	12APR17	MATERIAL/SPECIFICATION:
DESIGNER:	S.KADY	12APR17	
CAD SYSTEM: PRO/E	SCALE: 1:1	SHEET NO. 1 OF 1	
REFERENCE (DIREV.):		3D PLM REFERENCE(REV.): AR0041482/AB	
REFERENCE (DIREV.): 0001115497/AC		3D PLM REFERENCE(REV.): AR0041480/AB	
DRAWING NAME: FUEL MODULE OUTLINE			
SIZE: A0	DRAWING NUMBER: TU2031		